SPACIO HSTRSP

Pressure Balancing Shower TRIM

Spare Parts Sheet

Kit of spare parts for preventive maintenance.

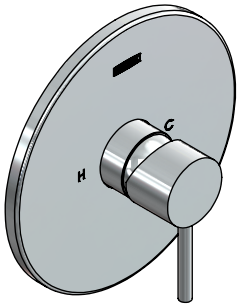

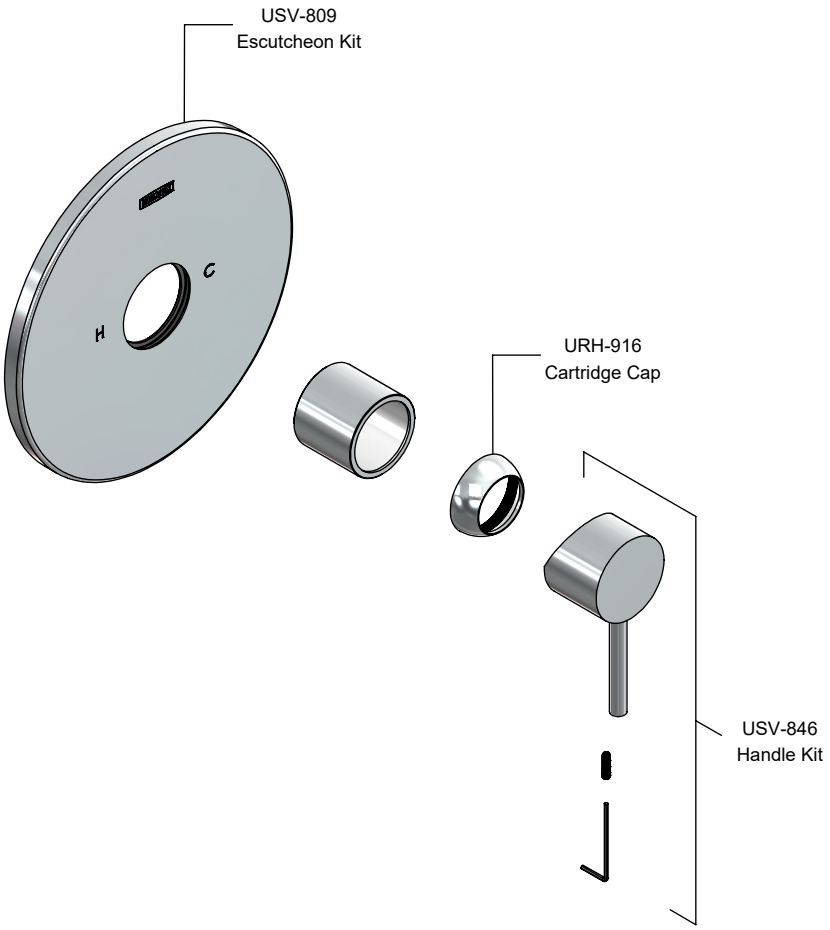

Technical Support and Service

technicalservice@helvexusa.com.mx

Toll Free Number: (855) 267 2498

Original Spare Parts

contact@helvexusa.com

The product's illustration may vary in appearance or its parts to the actual product as a result of the ongoing improvement process. This does not imply any liability to the manufacturer.
Visit our website **www.helvexusa.com**

NA