WC OPTION 2P W

1,28 GPF 2 Piece Elongated Toilet

Spare Parts Sheet

Kit of spare parts for preventive maintenance.

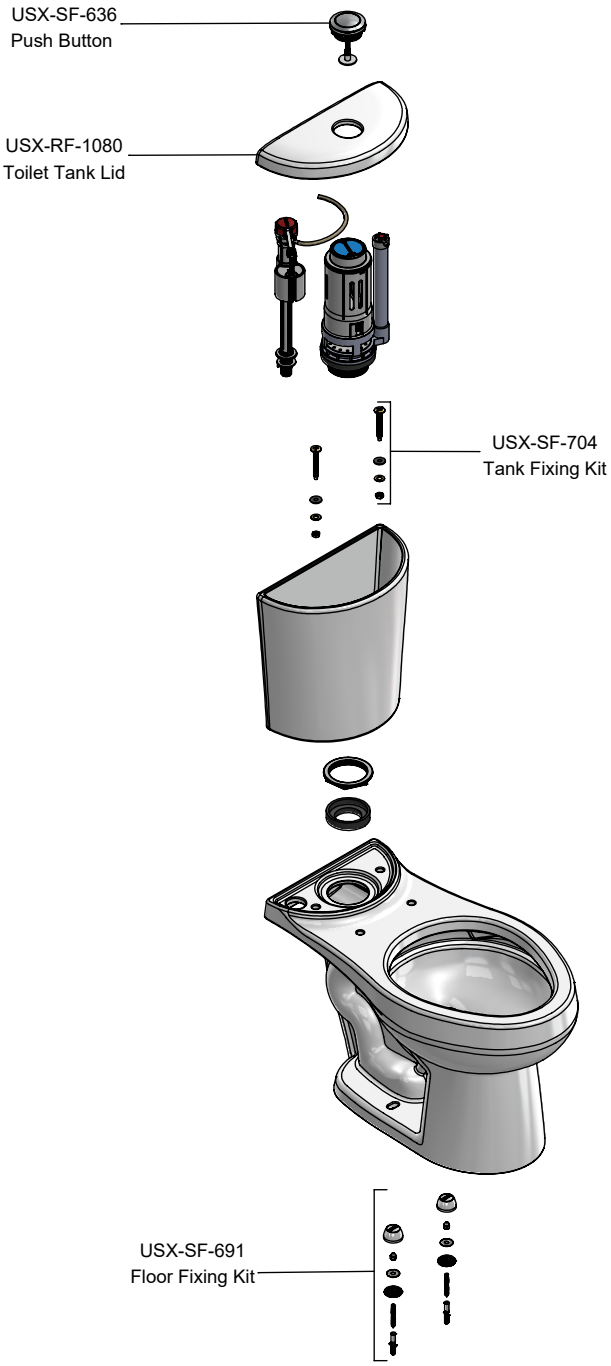

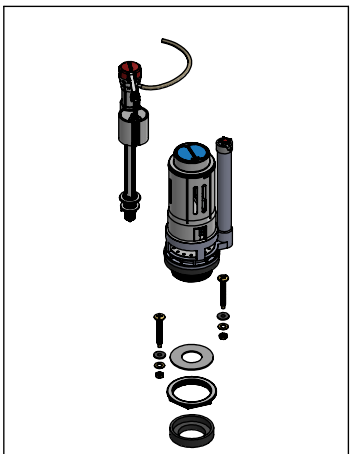

USX-SF-833
Fill Valve and 3" Flush Valve Kit
with Tank Fixing Kit

USX-SF-643
Lags Screw Cover Kit Tank
Toilet/Flux Toilet